1. Taping dimensions (Unit: mm)

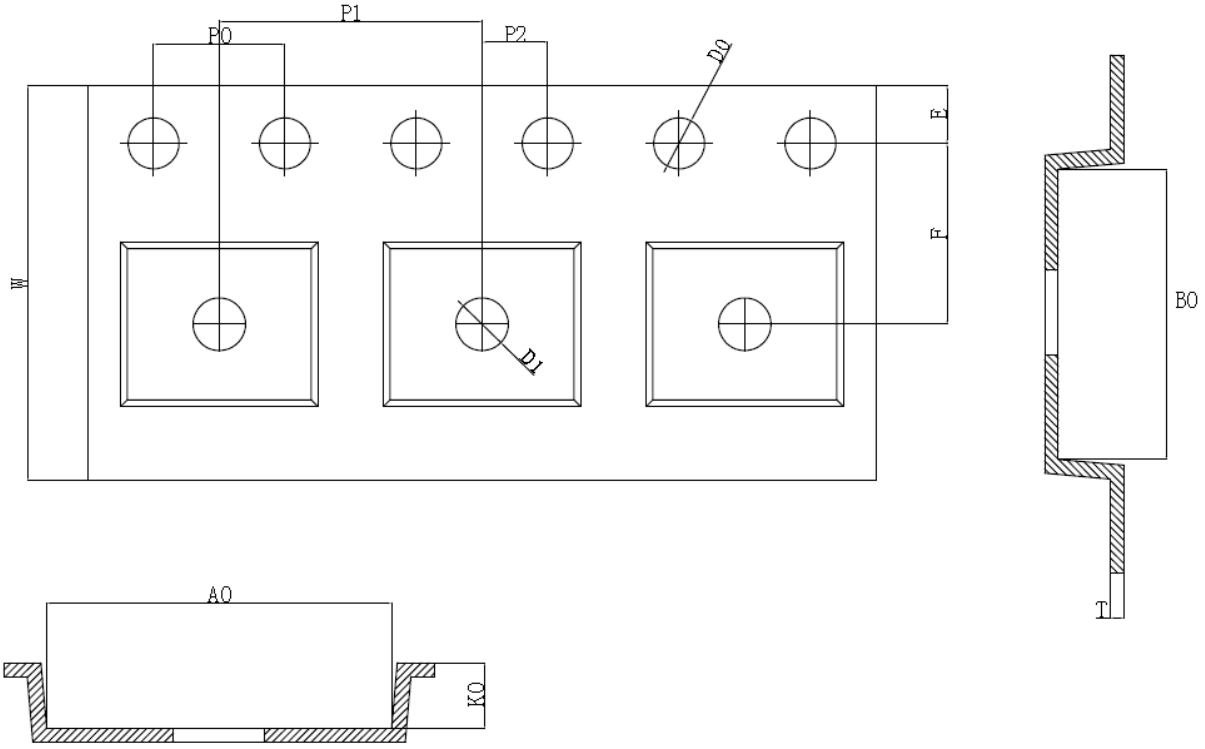

SYMBOL	A0	B0	K0	P0	P1	P2
SPEC	6.30±0.10	5.30±0.10	1.20±0.10	4.00±0.10	8.00±0.10	2.00±0.05
SYMBOL	T	E	F	D0	D1	W
SPEC	0.25±0.03	1.75±0.10	5.50±0.10	$1.55^{+0.01}_{0.00}$	$1.60^{+0.25}_{0.00}$	$12.00^{+0.30}_{-0.10}$

TAPING POSITION

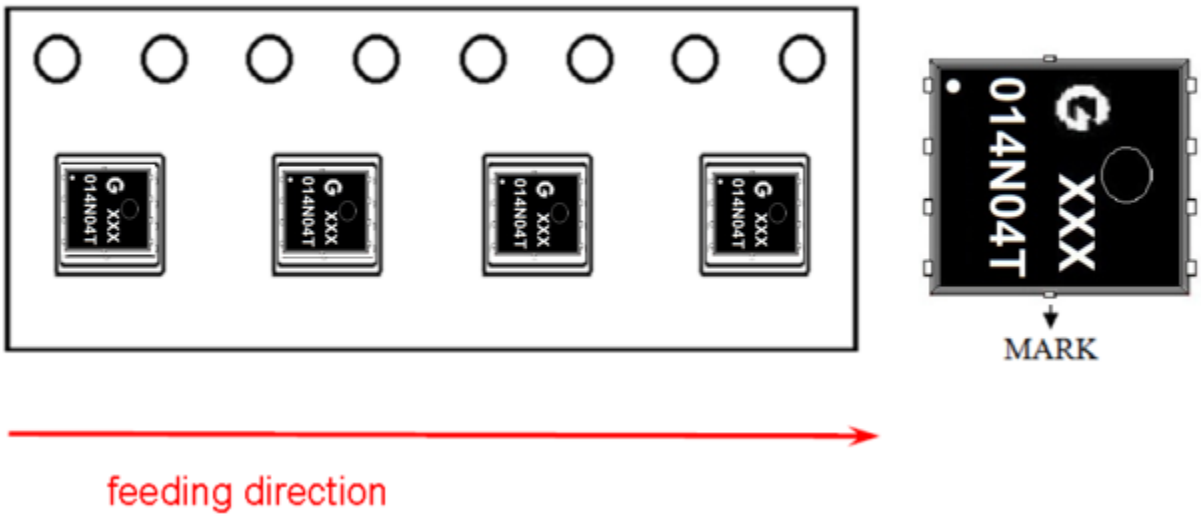

2. Reeling specification

2-1. Leading direction

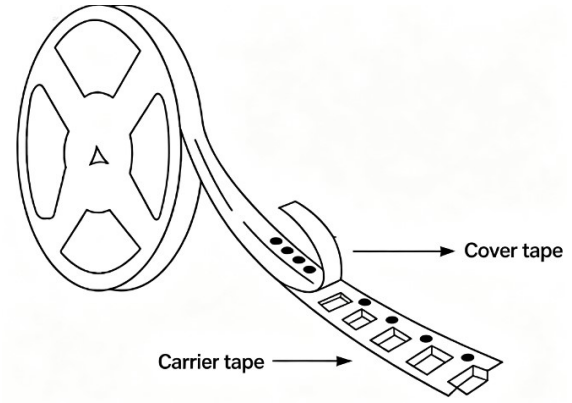

2-2. Leader and Trail

Leader tape shall be separated into two parts-an adhesive tape at first part and carrier tape without products.

Trail tape shall remain with no product and trail tape shall not be stuck directly on a reel.

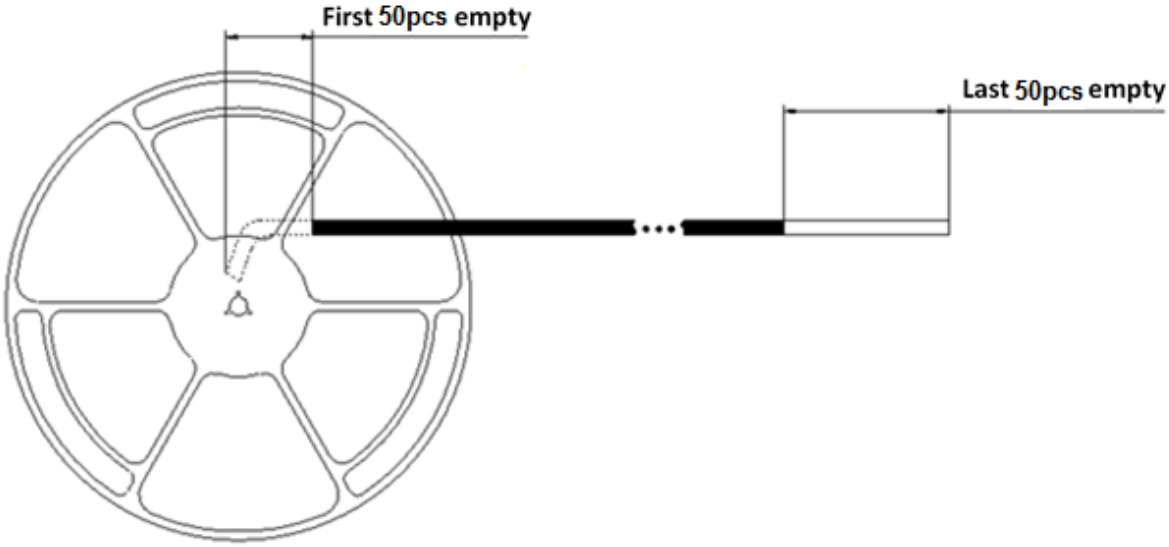

3. Treatment for end of tape

The end of leader tape shall be fixed with the yellow adhesive tape.

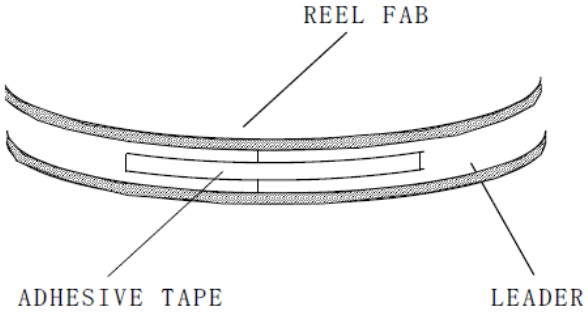

4. Quantity 5,000 pcs / reel
5. Reel dimensions (Unit: mm)

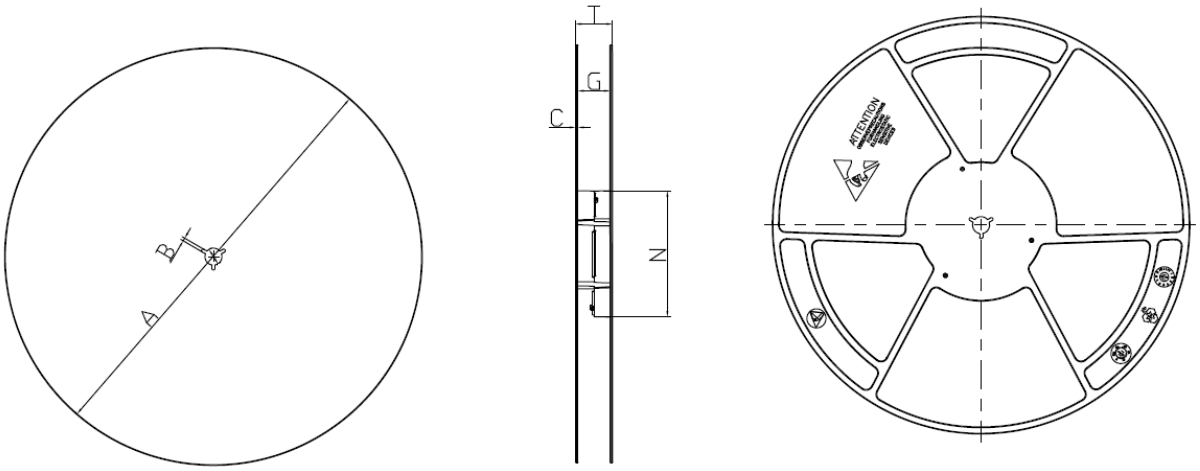

ØA	B	C	G	T	N
330±2	2.40±0.30	2±1	13.50^{+2}_{-1}	18.5±2	100±2

6. Marking
Each reel shall be legibly marked with the following items.

PART NO.: BL014N04T-5DL8 DATE: 2022-10-12

PKG.: PDFN5*6-8L Q'TY: 5KPCS

RANGE: PASS

LOT. NO.: ZE2210055

Changzhou Galaxy Century Microelectronics Co., Ltd.

7. Type
Product code of taping shall be composed as indicated below.

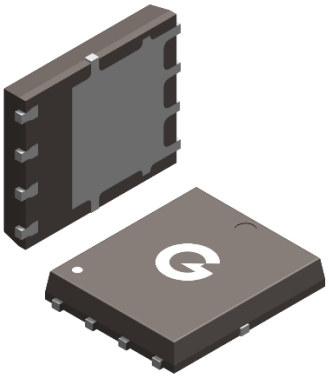

8. Taping Peeling Strength

Peel Force（Reel Package）
Angel of peeling off: 180±15 degree
Speed of peeling off: 3m per minute
Peel Force: 20g~80g

9. Recommended storage condition

Storage period

Use the products within 24 months after delivered.

Storage conditions

Products should be stored in the warehouse on the following conditions.

Temperature : 0~ 35° C

Humidity: 30 to 70% relative humidity No rapid change on temperature and humidity

Don't keep products in corrosive gases such as sulfur, chlorine gas or acid, or it may cause oxidization ofelectrode, resulting in poor solderability.

10. Package

1.ONE REEL(5Kpcs)

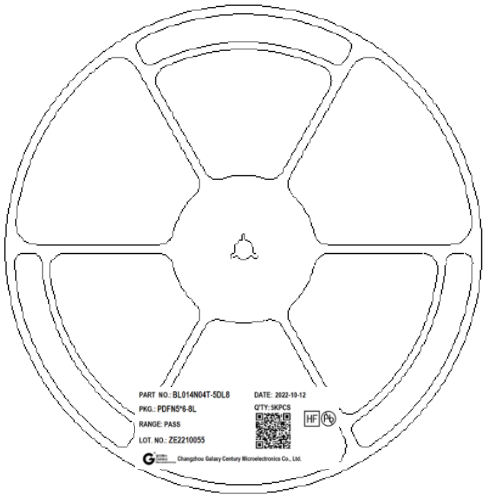

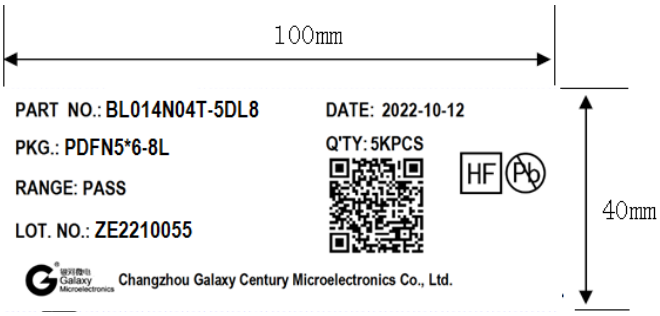

THE REEL LABEL

2 REEL

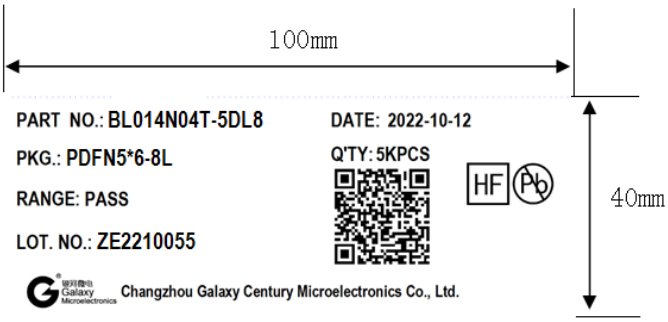

THE INNER BOX OR CARTON LABEL

2. INNER BOX(10Kpcs)

5 INNER BOXES

CARTON LABEL(50KPCS)